DRAWING NO

FAN CURVE:

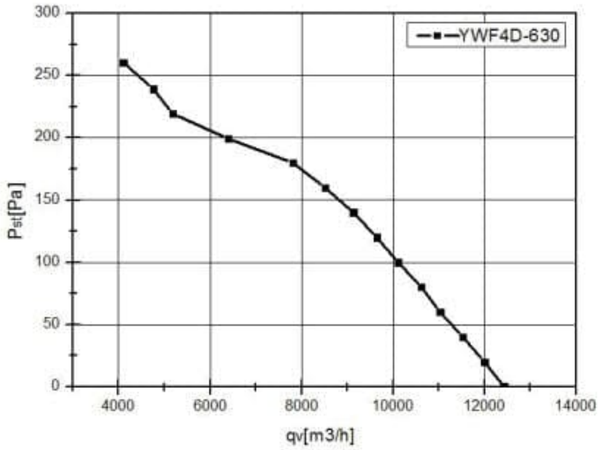

sucking

Direction of airflow"S"

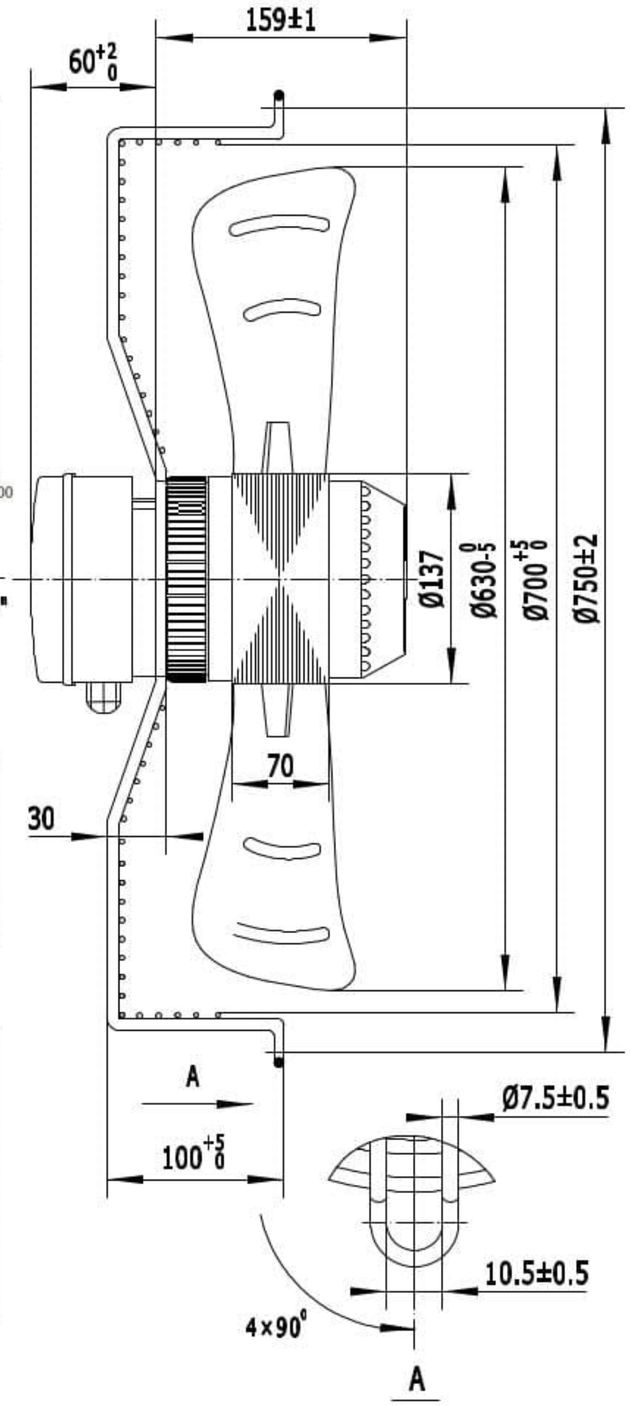

LABEL:

WEIGUANG®
Axial Fan Motor
YWF4D-630S-137/70-G
Δ 380V 50Hz 1.80A 550/880W 1320r/min
Y 380V 50Hz 1.20A 380/600W 1050r/min
CL.B IP54 XX/XX
CE

Wiring diagrams:

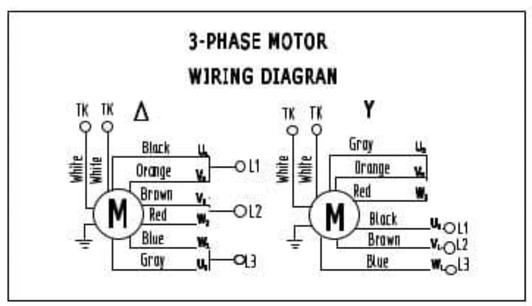

WEIGUANG® Axial fan motor

HANGZHOU WEIGUANG ELECTRONIC CO.,LTD

Unit: axial fan motor	Type:
Motor: Three phases motor	Customer:
Motor type: YWF4D-630S-137/70-G	Customer-type:

TYPE	Voltage v	Frequency Hz	Input power W	Current A	Speed r/min +/-5%	Air volume m^3/h	noise level dBA	capacitor μF/ VDB
YWF4D-630S-137/70-G	Δ 380	50	880	1.80	1320	/	75	/
	Y 380	50	600	1.20	1050	/	73	/

Insulation class : B	Operating type: S_1
Permissible ambient temperature : -30~60℃	Temperature Increase: ΔT≤75k
Motor protection:thermocontact 135±5℃	Bearings: ball bearings
	License: CE

Model meanings:

YWF 4D-630 S-137/70-G

- Asynchronism axial fan motor
- Motor pole
- Three Phases
- Fans diameter
- Direction of airflow
- The diameter of the rotor
- The thickness of laminated core
- Grid

Electrical connection:lead wire Silikon 9G 0.75mm², Length 100mm in terminal box connected

Direction of rotation: clockwise(sucking), Airflow direction:"S" looking at rotor side

APPROX. WEIGHT	
MEANS	

				DECIMAL	TOLERANCE		SIGN	DATE
				X	±0.5	DRN.BY		
				X.X	±0.25	CHD.BY		
				X.XX	±0.15	ENG.BY		
REV.	DESCRIPTION	APPROVED	DATE	ANGLE	±3°	APP.BY		

TITLE YWF4D-630S-137/70-G

PROJECTION

A4

SCALE

SHEET: of